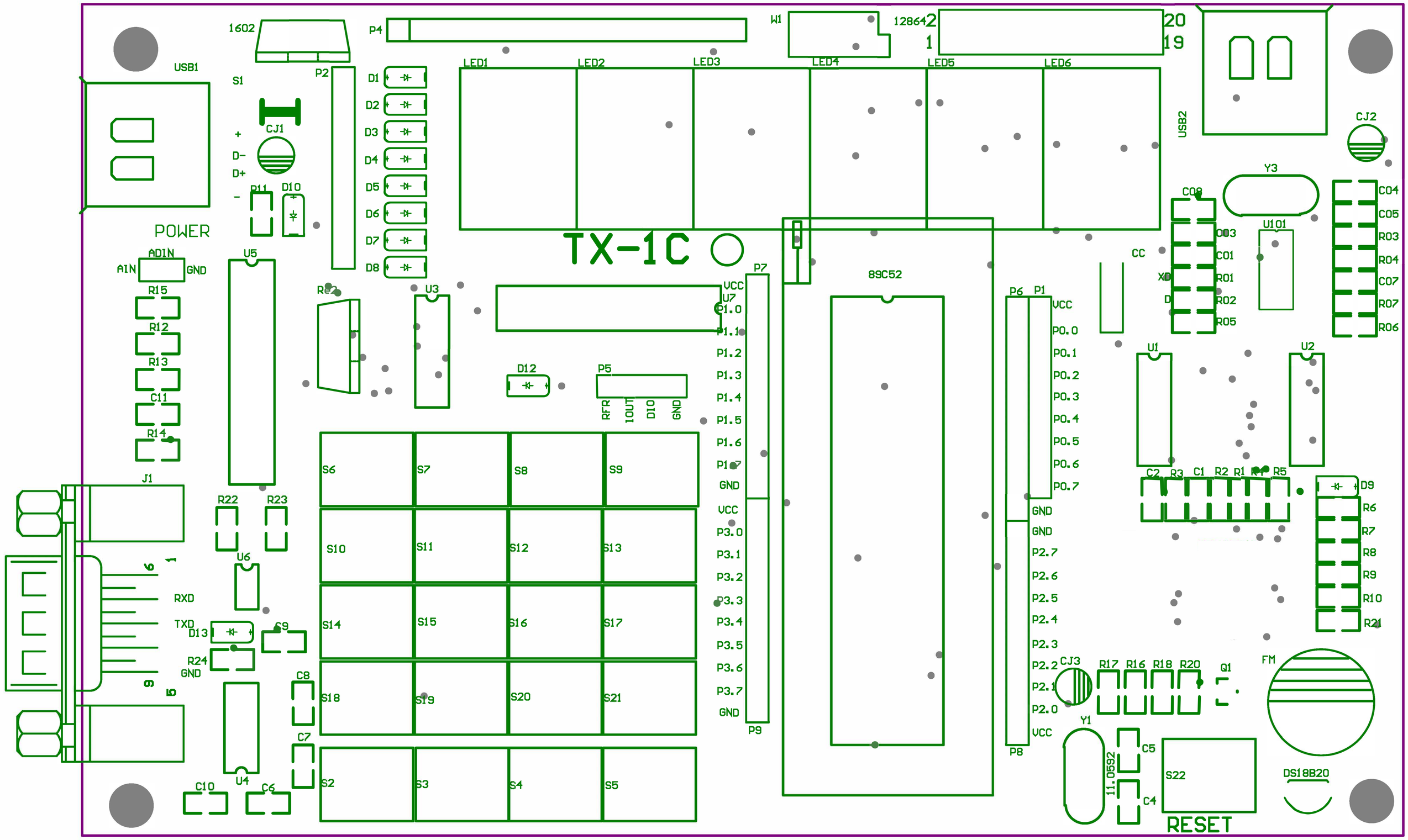
TX-1C
2019
12864
1602
USB1
USB2
POWER
ADIN
AIN
GND
S1
CJ1
CJ2
CJ3
P2
P4
P5
P6
P7
P8
P9
P1
W1
LED1
LED2
LED3
LED4
LED5
LED6
D1
D2
D3
D4
D5
D6
D7
D8
D10
D12
D13
D9
P11
U5
U3
U7
U6
U4
U1
U2
U101
Y3
Y1
Y2
89C52
CC
XD
D
C08
C03
C01
R01
R02
R05
C04
C05
R03
R04
C07
R07
R06
R15
R12
R13
C11
R14
J1
R22
R23
RXD
TXD
R24
C9
C8
C7
C10
C6
S6
S7
S8
S9
S10
S11
S12
S13
S14
S15
S16
S17
S18
S19
S20
S21
S2
S3
S4
S5
RFR
IOUT
DIO
VCC
P1.0
P1.1
P1.2
P1.3
P1.4
P1.5
P1.6
P1.7
GND
P3.0
P3.1
P3.2
P3.3
P3.4
P3.5
P3.6
P3.7
P0.0
P0.1
P0.2
P0.3
P0.4
P0.5
P0.6
P0.7
P2.7
P2.6
P2.5
P2.4
P2.3
P2.2
P2.1
P2.0
C2
R3
C1
R2
R1
R4
R5
R6
R7
R8
R9
R10
R21
R17
R16
R18
R20
Q1
FM
DS18B20
11.0592
C5
C4
S22
RESET

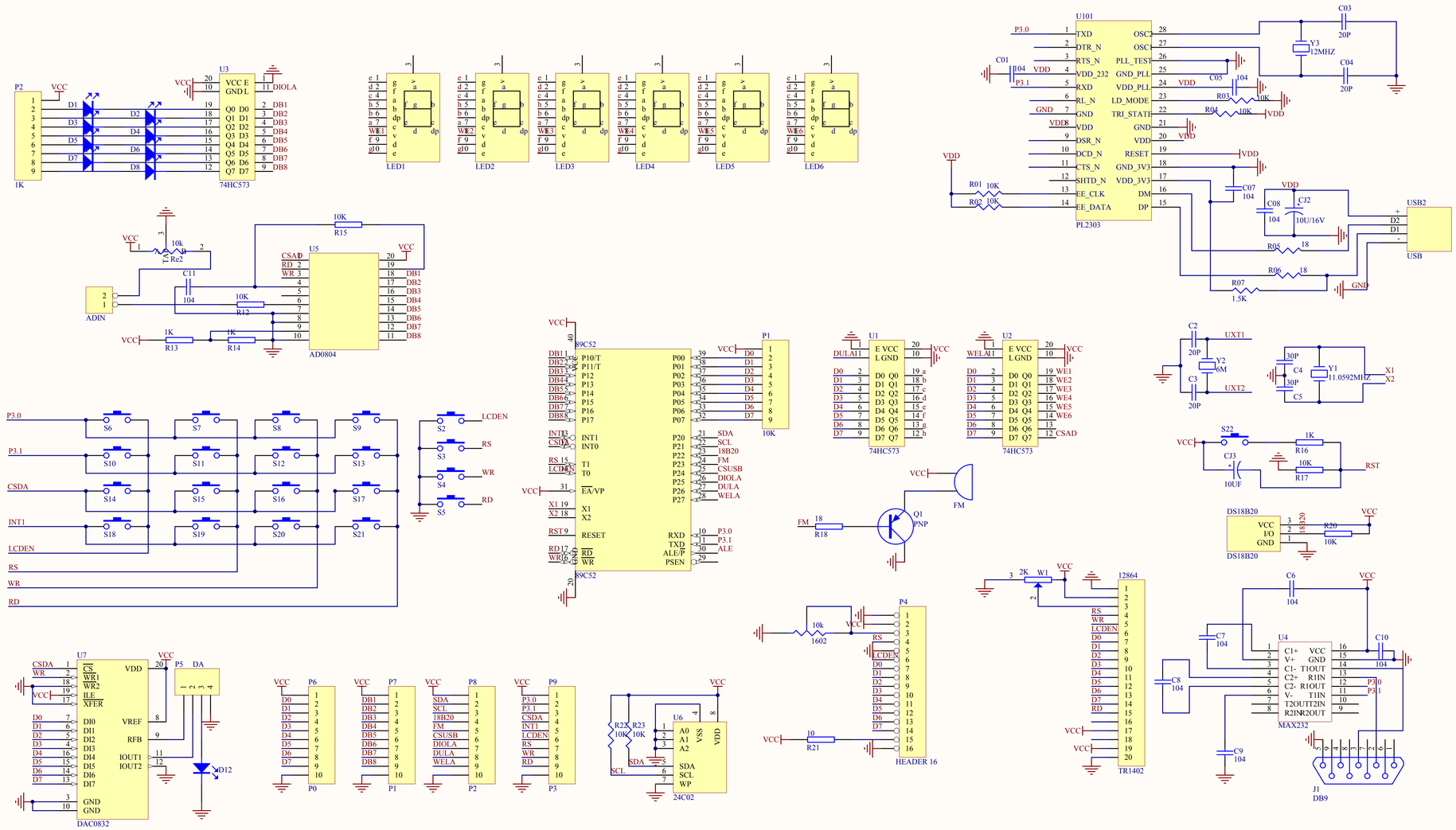

Title		
Size A	Number	Revision
Date:		Sheet of
File: D:\PCB\TX-1C\TX2 .SCHDOC		Drawn By: